数理解析研究所講究録
第 471 巻 1982 年 123-145

EMBEDDING OF GRAPHS INTO CELLULAR ARRAYS BY GRAPH FACTORIZATION METHOD

MASATERU HARAO
原尾 政輝
Research Institute of Electrical Communication
TOHOKU UNIVERSITY

ABSTRACT

In connection with a cellular dataflow computer architecture, the problem of embedding of (undirected) graphs into cellular arrays is discussed under the edge- and node- embedding conditions. The embedding conditions designed in this paper are based on the decomposition of graphs into the subgraphs of degree at most two. By means of this approach we show that arbitrary graphs of degree 6 can be embedded into the three layers of two-dimensional cellular array under both the edge- and node- embedding conditions using $O(n^2)$ cells. The classes of graphs embeddable into the two-dimensional cellular array are also characterized. Further we show that arbitrary graphs of degree 6 can be embedded into the three-dimensional cellular array under both the edge- and node- embedding conditions using $O(n^{3/2})$ cells.

I. INTRODUCTION

The study of the cellular automata has been developed as a model of parallel processors since more than ten years and until now many fruitful theoretical results have been obtained. On the other hand the computer architecture based on the cellular automata thoery was considered to be unrealistic from the practical viewpoints, because it needs enumerable cells and high technology. However recent advances in digital component manufacturing led people to consider the possibility of the cellular computer architecture. Recently several new architectures intending to build computers which are suitable for cellular or VLSI realization has been proposed. One of them is the rearrangeable computer architecture which can

change its structure logically according to the input program into a suitable structure ([2],[13]),and our dataflow cellular computer architecture is based on fundamentally the same idea.

A program of dataflow cellular computer can be represented as a directed graph with token like usual dataflow machines, where each node corresponds to an operator and each arc shows the data path. In that case computer architecture the program has to be mapped directly into the cellular array homeomorphically such that each node is mapped to a cell and each arc to a path. Each cell of the cellular computer computes the operation of the node which is mapped to it. By this architecture we are able to expect a highlly parallel and epochal machine, but on the other hand there exist many technical and theoretical problems to be solved.

One of the important problems is to design an efficient algorithm of embedding the dataflow graphs into cellular arrays. As the first step for such objectives we investigate in this paper the embeddings of graphs into the multi-layered and the three dimensional cellular array. Since the directed graph representation of the dataflow graph is not essential for the embedding problem we discuss it concerning with undirected graphs. Until now the graph embedding problem has been discussed from several viewpoints such that , from VLSI algorithm ([4],[8],[12]), from the universal circuit ([9],[14],[15]) and from the rearrangeable computer ([1],[5],[12],[13]),etc.. Concerning with the universality , two dimensional cellular array is available for any graphs of degree four([14]), and three dimensional cellular array is available for any graphs of degree six ([4],[12]) if the crossing over of interconnections are permitted. However the concrete embedding algorithm is not described in the abovementioned articles. But our approach is independent of them and we give the concrete embedding algorithms of graphs. The main results obtained in this paper are the universality of 3-layered cellular array and three dimensional cellular array with and without the crossing overs.

II. FORMAL FRAMEWORK and PRELIMINARY RESULTS

We describe in this section the basic definitions of graphs and the mathematical formulation of the embedding problem. The detailed definitions on graphs are to be reffered to [7].

2.1. Basic Definitions on Graphs

An <u>undirected graph</u> G is a pair (V,E), where V is the set of nodes and $E \subset \{\{u,v\} ; u \neq v, u,v \in V\}$ is the set of edges. An edge $e = \{u,v\}$ is said to <u>join</u> u and v. We write e = uv and say that u and v are <u>adjacent</u> nodes; node u and edge e are <u>incident</u> with each other,as are v and e; e is incident with u and v. If two distinct edges e_1 and e_2 are incident with a common node, then they are adjacent edges.

The <u>degree</u> of a node is the number of edges incident with it. The degree of G is the maximal degree of its node set. The <u>order</u> of G is the cardinality of V. The <u>size</u> of G is the cardinality of E. A <u>walk</u> of a graph G is an alternating sequence of nodes and edges $v_0, e_1, v_1, \ldots, v_{n-1}, e_n, v_n$ beginning and ending with nodes,in which each edge is incident with the two nodes immediabtely preceding and following it. This may also be denoted $v_0 v_1 \ldots v_n$. It is a <u>trail</u> if all the edges are distinct,and a <u>path</u> if all the nodes are distinct. A <u>loop</u> is a cycle joining to itself. If a walk is closed,then it is a <u>cycle</u>. A walk is called <u>eulerian</u> if it traverses each edge once,goes through all nodes,and ends at the starting node.

A graph is <u>connected</u> if every pair of nodes are joined by a path. A maximal connected subgraph of G is called a <u>connected component</u> or simply <u>component</u>. A graph is <u>totally disconnected</u> if every pair of its nodes is not adjacent. A <u>bigraph</u>(or <u>bipartite graph</u>) G is a graph whose node set V can be partitioned into two subsets V_1 and V_2 such that every edge of G joins V_1 with V_2.

3.2.Embedding into Cellular Array

Throughout this paper we allow no selfloops in the graphs. Two kinds of homeomorphic embeddings will be considered.

<u>Definition</u> 1[14] A node-embedding (f,g) of $G_1=(V_1,E_1)$ into $G_2=(V_2,E_2)$ is a mapping such that

1) f maps V_1 one to one and into V_2,
2) g maps E_1 into paths in G_2(i.e.,(u,v) maps to a path from f(u) to f(v)),such that every pair of such paths is node-disjoint except possively at the ends.

Definition 2[14] An edge-embedding (f,g) of $G_1=(V_1,E_1)$ into $G_2=(V_2,E_2)$ is a mapping such that

1) f maps V_1 one to one into V_2,

2) g maps E_1 into paths in G_2 such that every pair of such path is edge disjoint.

Let I be the set of integers . By I^d we denote the d-fold Cartegian product of I. Let $s_i, i=1,2,\ldots,d$, be an element of I^d such that $(0,\ldots,1,\ldots,0)$, where 1 is in the i-th position. By regarding I^d as a d-dimensional vector space, we denote the additive operation "+".

Definition 3 A d-dimensional cellular array is a graph $CN_d = (V_d,E_d)$ such that

1) $V_d = I^d$,

2) $E_d = \{ v, v+s_i ; v \in V_d , i=1,2,\ldots,d \}$.

Mostly we treat the three dimensional case, and therefore a cell position will be denoted by a vector such that (x,y,z), $x,y,z \in I$. A m-layer of CN_2 is denoted by $m\text{-}CN_2$ and is called an m layered cellular array.

We assume two kinds of cells. One is the active cell which is used for the execution of operation and the other is the switching cell which is used for the interconnections. Intuitively saying an embedding of G into CN_d is explained such that for each edge e of G the path g(e) of CN_d is built by setting the switches of cells locating in g(e). We denote the terminals of each cell integers from 1 to 6 (see Fig.1), and an interconnection between the cells (i,j,k) and (i',j',k') along the axis will be denoted as follows;

$\text{Connect}_X((i,j,k),(i',j',k'))$

$\text{Connect}_Y((i,j,k),(i',j',k'))$

$\text{Connect}_Z((i,j,k),(i',j',k'))$

A general interconnection is represented by a sequence of such ones. We deal with in this paper only the homeomorphic embedding. For example, as for the embedding of a node of Fig.2(a), Fig.2(b) is allowed but the decomposition-embedding (Fig.2(c)) is not allowed.

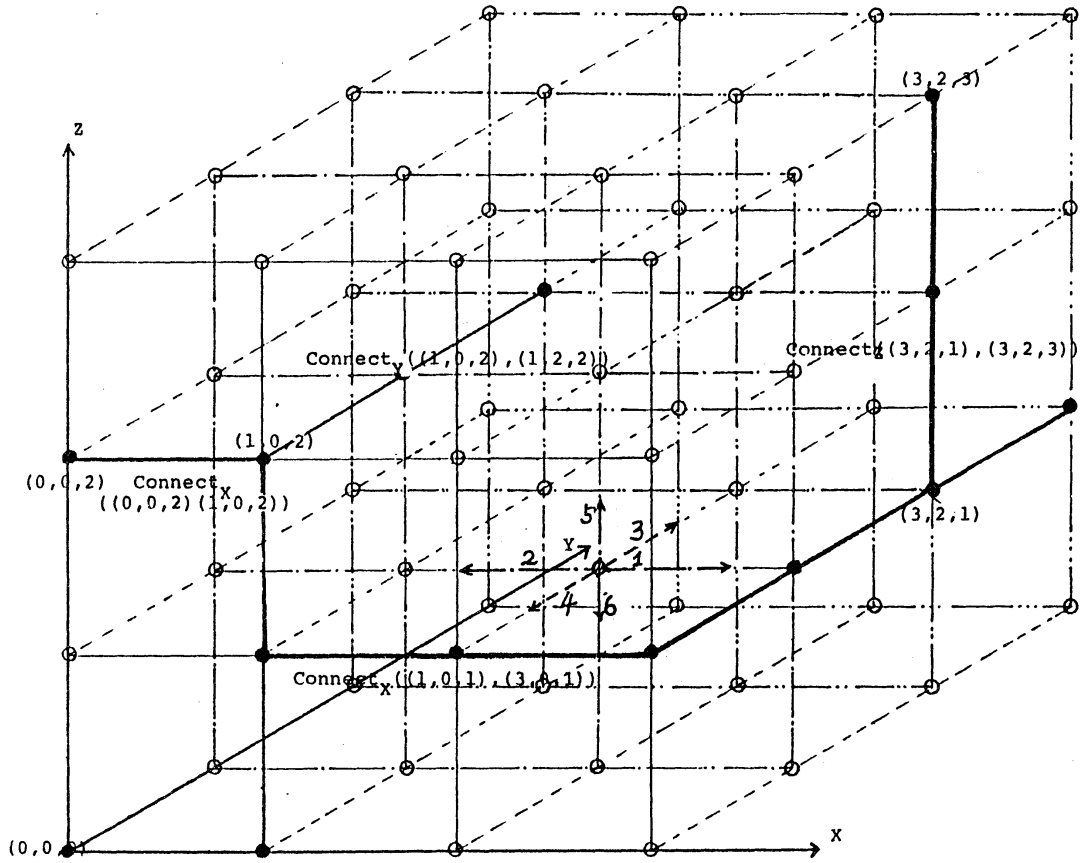

Fig.1. A part of the three-dimensional cellular array.

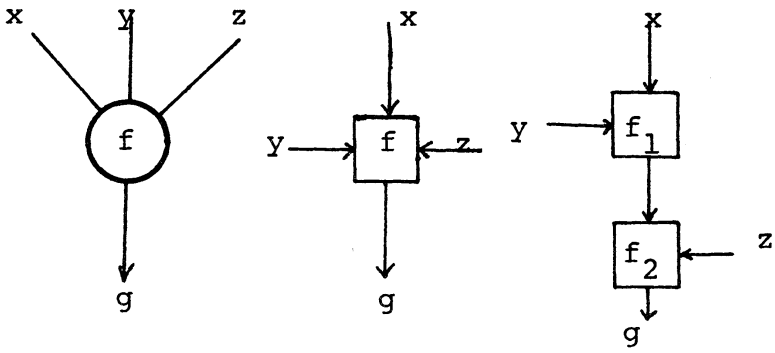

(a) A node of dataflow graph. (b) An Embedding. (c) A decomposition embedding.

Fig.2. A node of dataflow graphs and its embedding.

III. FACTORIZATION of GRAPHS

As mentioned before, the embedding algorithm described in this paper is based on the factorization of the graphs. We will describe the properties on it.

3.1. BASIC CONCEPTS

A spanning subgraph is a subgraph containing all the nodes of G. A factor of a graph G is a spanning subgraph of G which is not totally disconnected. We say that G is the sum of factors G_i if it is their edge-disjoint union, and such a union is called a factorization of G. A factor is p-factor if it is a path, and is z-factor if its degree is at most two. If a factor is a regular graph of degree d, then it is a d-factor. If G has a factorization into z-factor, p-factor and 2-factor, then we denote it (z,p,2) factorization.

3.2. Factorization Theorem

An edge-coloring of a graph G is an assignment of colors to its edges so that no two adjacent edges are assigned the same color. A k edge-coloring of is an edge-coloring of G which uses exactly k colors. The edge-chromatic number x(G) is the minimum k for which G has a k edge-coloring.

Proposition 1 For any graph G of degree k, the edge-chromatic number satisfies the inequalitie

$$k \leq x(G) \leq k+1.$$

Proof: cf.[7].

Proposition 2 Any bigraph of degree k has the edge-chromatic number k.

Proposition 3 Let G be an arbitrary graph of edge-chromatic number i. Then G has a factorization such that

1) for i=6, (z,z,z),
2) for i=5, (p,z,z),
3) for i=4, (z,z),
4) for i=3, (p,z).

proof: 1) From Proposition 1, G is either degree 5 or 6. We assign to each edge of G the colors $\{a,b,c,d,e,f\}$ and partition the set of edges into three subsets E_1, E_2, and E_3 according to whether the color is in $\{a,b\}$, $\{c,d\}$, or $\{e,f\}$ factor.

2), 3) and 4) are prooved similarly. [+]

Lemma 1 [15] Let G be a digraph whose indegree and outdegree are both less than k. Then G can be factored into k factors whose indegree and outdegree are both less than 1.

Theorem 1 Let G^* be any graph of degree $2k, k \geq 1$. Then G^* can be factored into k z-factors.

Proof: There are even number of nodes of odd degrees. Accordingly we can transform G^* into a G_1 which contains only the nodes of even degrees by adding edges to odd nodes. Since G_1 is eulerian, we assign each edge of G a direction according to the direction of its eulerian trail. Let the resulting graph be G_2. Applying Lemma 1 to G_2, G_2 can be factored into k factors. In each factor we remove the directions and added edges. The resulting factors are the z-factors of G^*. [+]

Theorem 2 Let G^* be any graph of degree $2k+1, k \geq 1$. Then G can be factored into one p-factor and (k-1) z-factors.

Proof Using the same algorithm to Theorem 1, we can factor G^* into k z-factors. Let F be a z-factor of G^*. In general F consists of cycles and paths. If F contains some cycles, then we choose an edge from each cycle. Let they be $\{e_1, e_2, \ldots, e_m\} = E\sim$. Next we remove $E\sim$ from F and the resulting factor will be denoted by $F\sim$. It is easy to see that $F\sim$ ia a p-factor. The complement graph $G\sim = G^* - F\sim$ is a graph of degree 2k-2. Using Theorem 1 we factor $G\sim$ into (k-1) z-factors, $F_1\sim, F_2\sim, \ldots, F_{k-1}\sim$. Obviously such factors together with $F\sim$ give a factorization of G^*. [+]

Example 1 Factorizations of graphs.

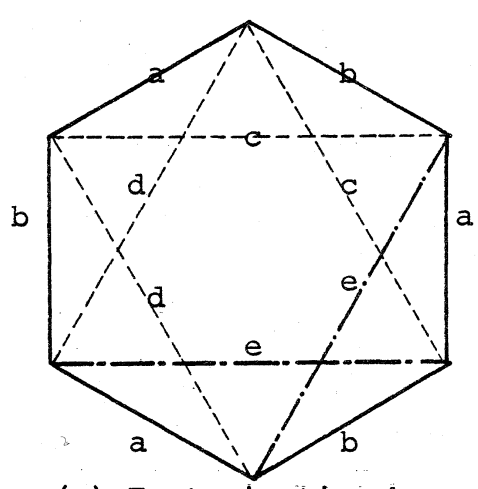

(a) Factorization by coloring.

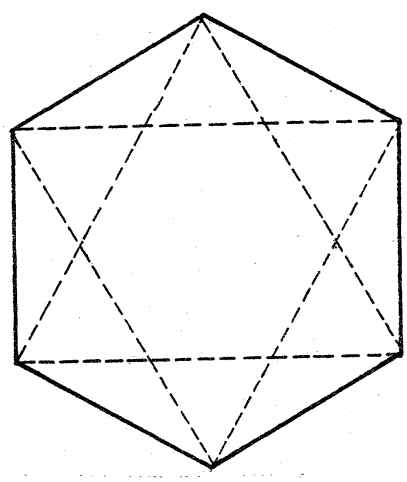

(b) Factorization by Theorem 1.

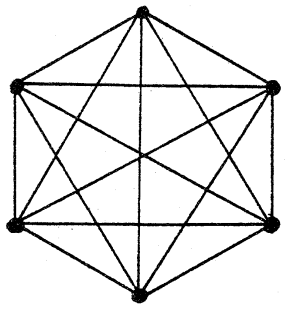

(a) The given graph G.

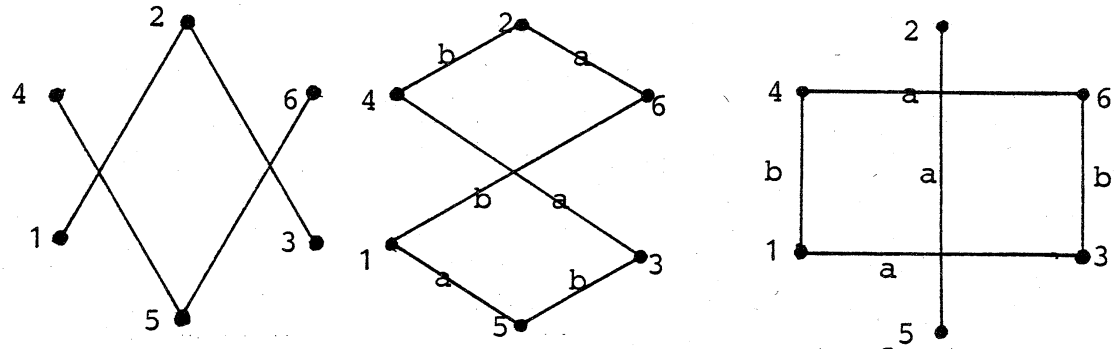

p-factor z-factor z-factor

(b) A factorization.

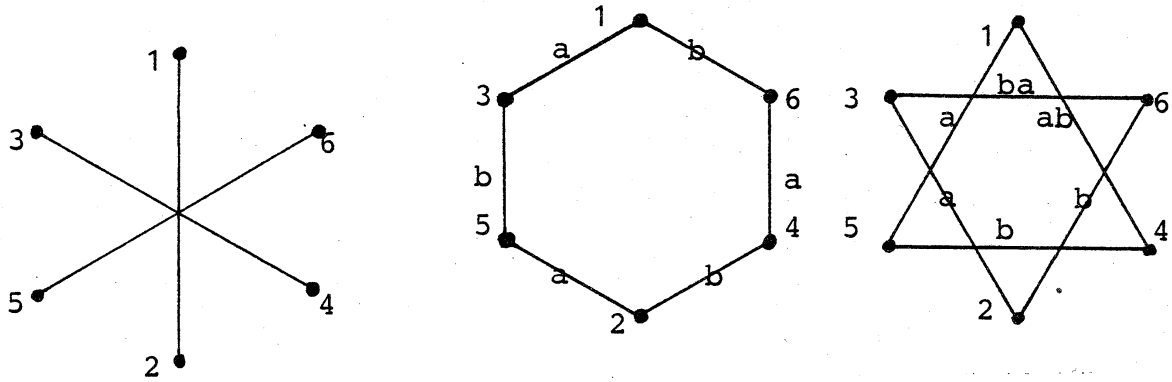

P -factor z-factor z-factor

(c) A factorization.

Fig. 3. Examples of factorization.

IV.EMBEDDING INTO MULTI-LAYERED CELLULAR ARRAYS

We describe the embedding schemes for the degree four and six graphs. Let H(n) be a class of graphs of order n and S(H(n)) be the minimal area of the cellular array required to embed any graphs of H(n). By $K_E(H(n))$ and $K_N(H(n))$ (or shortly $K_E(n)$ and $K_N(n)$) we denote the number of cells in the area S(H(n)) under the edge and node embeddings respectively. We assume hereafter a given graph G has been decomposed into z-factors and denote the i-th factor F_i.

4.1.Embedding of degree four graphs

As for the edge-embedding the following result has already been given.

Proposition 4[14] Let H(n) be either the class of graphs of degree three, or the class of graphs of degree four. Then for some c_1, c_2, it holds

$$c_1 n^2 \leq K_E(n) \leq c_2 n^2.$$

The proof of Proposition 3 indicates that the coefficient c_2 is 9 in general. We show next a more compact edge-embedding and also a node-embedding by designing a concrete algorithm.

Theorem 3 Let H(n) be the class of graphs of degree four. Then any graph G of H(n) can be edge-embedded into CN_2 and node-embedded into $2\text{-}CN_2$ such that

$$K_E(n) < 3n^2 + 2kn,$$
$$K_N(n) < 6n^2 + 4kn,$$

where k is the number of cycle components of odd length of the factor F_2 of G.

Proof: We dispose the active cells along the X-axis and at the both the left and the right side of each active cell we dispose a switching cell which is called the free cell (see Fig.4).

Edge-Embedding

1) A-mode embedding (f, A^E): For this mode, we use the terminals 1 and 2.

a) For any node i, $f(i) = 3i-2$ if $i \leq n$, $2n+i-2$ if $i>n$.

b) For any edge $e = \{i, j\}$,

i) If $j=i+1$, then $A^E(e) = \text{Connect}^X(f(i), f(i+1))$.

ii) If $j \neq i+1$, then $A^E(e)$

$$= \text{Connect}^Y(f(j), f(j)+(1,0,0))$$
$$\text{Connect}^X(f(j)+(1,1,0), f(i)+(-1,1,0))$$
$$\text{Connect}^Y(f(i)+(-1,1,0), f(i)+(-1,0,0))$$
$$\text{Connect}^X(f(i)+(-1,0,0), f(i)).$$

2) B-mode embedding (f, B^E): By this mode, we embed the factor F^2 using the terminals 3 and 4. If there exist some cycle components of odd length in F^2, then we transform them to the ones of even length by inserting a node to each such component. Corresponding to such inserted nodes, we use the k cells at the right hand side of the active cell n and assign each inserted node a number of $n+1, \ldots, n+k$. It is noted that the transformed factor $F^{2\wedge}$ is two-edge colorable. Let the colors be "a", "b".

a) f is the same to A-mode embedding.

b) For any edge $e = \{i, j\}, i<j$,

i) if e is colored by "a",

$$B^E(e) = \text{Connect}^Y(f(i), f(i)+(0, i+1, 0))$$
$$\text{Connect}^X(f(i)+(0, i+1, 0), f(j)+(0, i+1, 0))$$
$$\text{Connect}^Y(f(j)+(0, i+1, 0), f(j)).$$

ii) if e is colored by "b",

$$B^E(e) = \text{Connect}^Y(f(i), f(i)+(0, -i, 0))$$
$$\text{Connect}^X(f(i)+(0, -i, 0), f(j)+(0, -i, 0))$$
$$\text{Connect}^Y(f(j)+(0, -i, 0), f(j)).$$

It is easily obserbed by examining the area $S(H(n))$ that

$$K^E(n) < 2\,(1+2+3+ \ldots +n-1)*3 + kn + 3n$$
$$= 3n(n-1)+3n+2kn$$
$$= 3n^2+2kn.$$

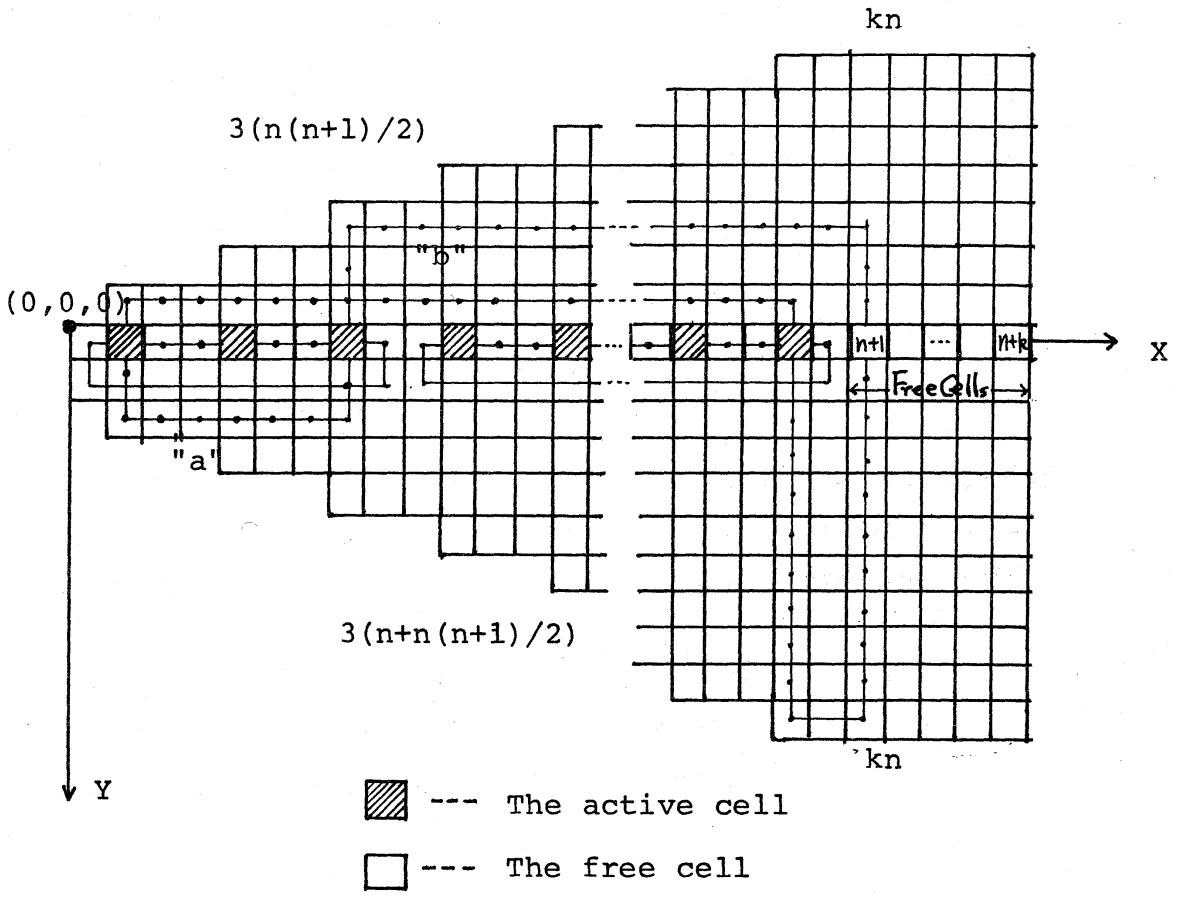

Fig.4. The Edge-embedding scheme of Theorem 3.

Node-embedding

1) A-mOde embedding (f, A^N):

a) f is the same to the edge-embedding.

b) For any edge $e=\{i,j\}, i<j$,

i) if $j=i+1$, then $A^N(e)=\text{Connect}^X(f(i), f(i1))$.

ii) if $j \neq i+1$, then

$$A^N(e)=\text{Connect}^X(f(i), f(i)+(-1,0,0))$$
$$\text{Connect}^Y(f(i)+(-1,0,0), f(i)+(-1,1,0))$$
$$\text{Connect}^Z(f(i)+(-1,1,0), f(i)+(-1,1,-1)$$
$$\text{Connect}^X(f(i)+(-1,1,-1), f(j)+(1,1,-1))$$
$$\text{Connect}^Z(f(j)+(1,1,-1), f(j)+(1,1,0)$$
$$\text{Connect}^Y(f(j)+(1,1,0), f(j)+(1,0,0))$$
$$\text{Connect}^X(f(j)+(1,0,0), f(j)).$$

2) B-mode embedding (f, B^N):

a) f is the same to the edge-embedding.

b) For any edge $e=\{i,j\}, i<j$,

i) if e is colored by "a", then

$$B^N(e)=\text{Connect}^Y(f(i), f(i)+(0,i+1,0))$$
$$\text{Connect}^Z(f(i)+(0,i+1,0), f(i)+(0,i+1,-1))$$
$$\text{Connect}^X(f(i)+(0,i+1,-1), f(j)+(0,i+1,-1))$$
$$\text{Connect}^Z(f(j)+(0,i+1,-1), f(j)+(0,i+1,0))$$
$$\text{Connect}^Y(f(j)+(0,i+1,0), f(j)).$$

ii) if e is colored by the color "b", then

$$B^N(e)=\text{Connect}^Y(f(i), f(i)+(0,-i,0))$$
$$\text{Connect}^Z(f(i)+(0,-i,0), f(i)+(0,-i,-1))$$
$$\text{Connect}^X(f(i)+(0,-i,-1), f(j)+(0,-i,-1))$$
$$\text{Connect}^Z(f(j)+(o,-i,-1), f(j)+(0,-i,0))$$
$$\text{Connect}^Y(f(j)+(0,-i,0), f(j)).$$

The embedding scheme is illustrated in Fig.5. [+]

Corollary 1 Let H(n) be the class of graphs of degree three. Then any graph G of H(n) can be edge-embedded into CN^2 and node-embedded into $2\text{-}CN^2$ such that

$$K^E(n) < n^2 + 2kn,$$
$$K^N(n) < 2n^2 + 4kn,$$

where k is the number of cycle components of odd lengths of the factor F^2.

Proof: We take the p-factor of G as F^1. It is easy to see that F^1 can be embedded without free cells among the active cells. [+]

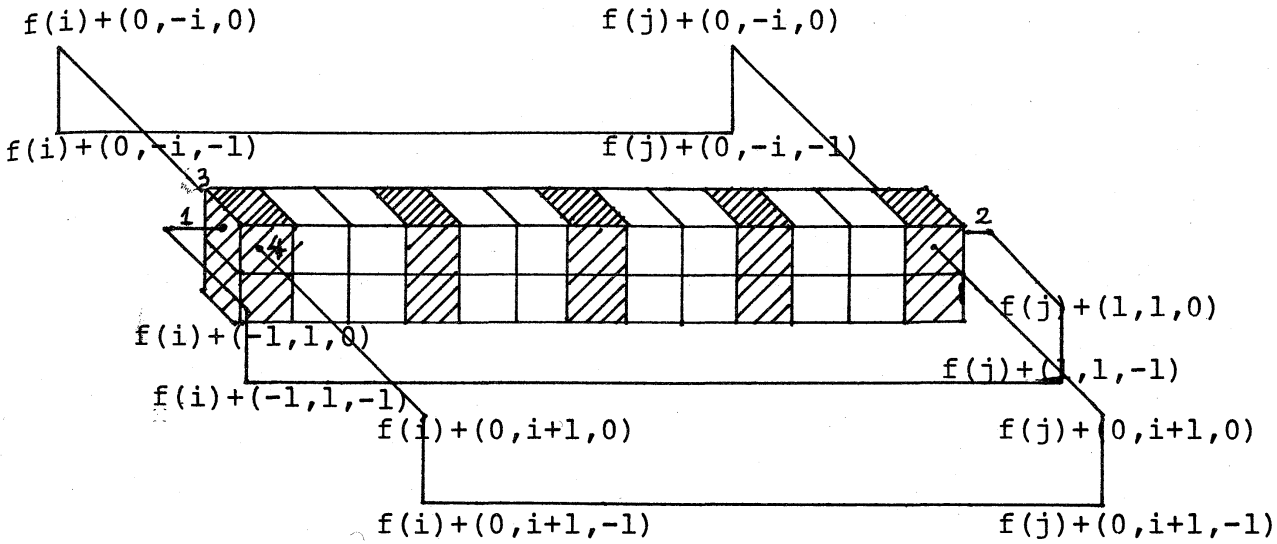

Fig.5. The node-embedding scheme of Theorem 3.

4.3 Embedding of degree 6 graphs

We describe in this section a general algorithm to embed any graphs of degree 6 into 3-CN^2. The factors F^1,F^2 will be embedded using the similar algorithm to Theorem 3. In order to embed F^3,we use the terminals 5 and 6,and interconnections will be build on the upper and down side layers.

Theorem 4 Let H(n) be the class of graphs of degree 6. Then any graph of H(n) can be edge- and node-embedded into 3-CN^2 such that

$K^E(n) < 9n^2 + 6kn$,

$K^N(n) < 18n^2 + 12kn$.

Proof: We only show here the rough sketch of this embedding in Fig.6. [+]

Corollary 2 Let H(n) be the class of graphs of degree three. Then any graph of H(n) can be edge- and node-embedded into 3-CN^2 such that

$K^E(n) < 3n^2 + 6kn$,

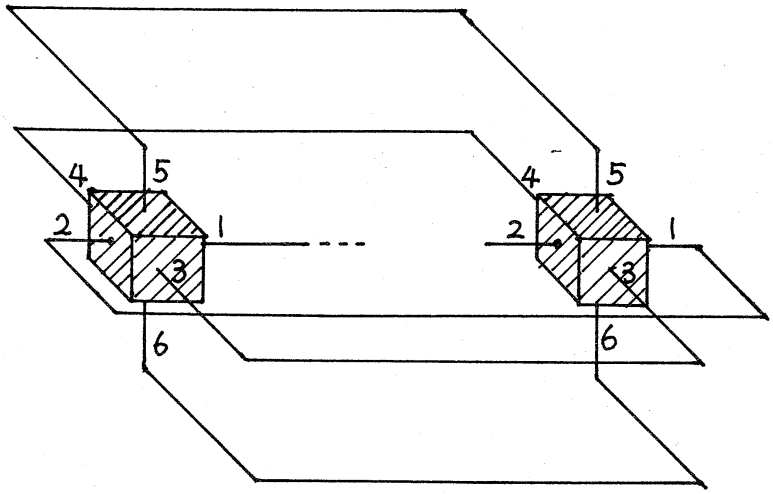

(a) The edge-embedding scheme into 3-CN_2.

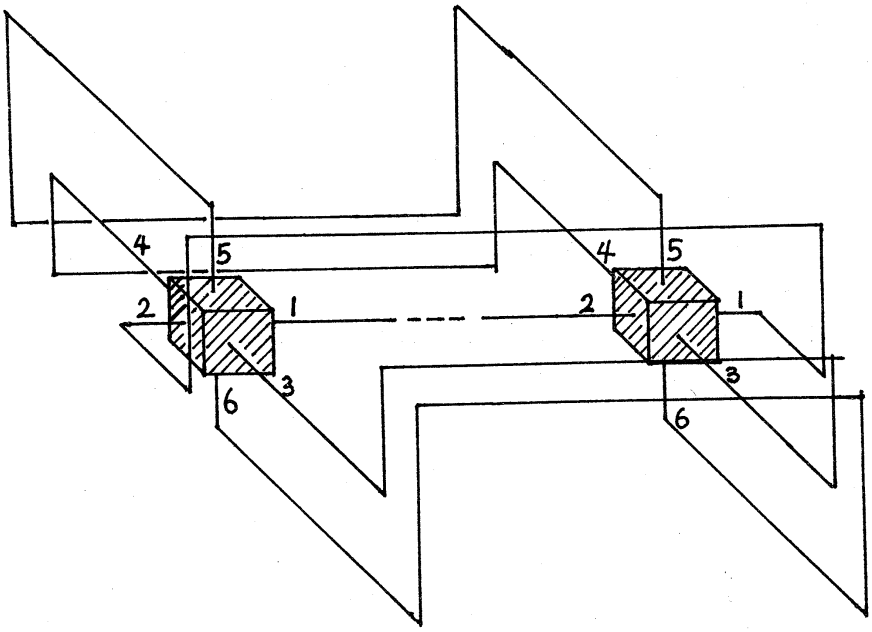

(b) The node-embedding scheme into 3-CN_2.

Fig.6. The embedding schemes into 3-CN_2.

V. EMBEDDING INTO THREE DIMENSIONAL CELLULAR ARRAY

We can easily obserbe that CN^3 is universal with respect to both the edge-embedding and node-embedding. Accordingly the benefit of the embedding into CN^3 will be the compactness or the simplicity of embedding algorithm. We will show in this section an algorithm to embed any graphs of degree six into $O(n^{3/2})$ area.

5.1. Basic Embedding Scheme

We edge-color each factor of the given graph G using the same procedure of Chapter iV.The subgraphs of the factor F^i,i=1,2,3,with the edges colored by "a" ,"b" are denoted as $F^i(a)$,$F^i(b)$. In the next Theorem we will show an embedding of such a graph using the terminal5, and the general embedding algorithm is a combination of this scheme.

Theorem 5 Let G be an arbitrary graph of degree 6 and let F(*) be a subgraph of a factor F of G with the color *. Then F(*) can be edge-embedded into CN^3 such that

$$K^E(n) < n^{3/2}.$$

Proof: Let m = n ,and let (f,W^E) be an edge-embedding. We dispose the active cells on the m*m area of the first layer ,that is , for any node s f(s)=(p,q,0) for some p,q I.

Corresponding to F(*),we draw a graph B = (V,E) such that $V=\{u^1,\ldots,u^m,v^1,\ldots v^m\}\times\{1,2,\ldots,m\}$,and $\{(u^i,j),(v^l,k)\}\in E$ iff (s,t) is an edge of G such that f(s)=(i,j,0) and f(t)=(k,l,0) ,i<k,respectively .

As we can see easily, B is a bigraph of degree less than m. From Proposition 2, B is m edge-colorable, and we denote the colors $\{1,2,\ldots,m\}$.

Let (s,t) be an edge of F(*) corresponding to an edge of B;$\{(u^i,j),(v^l,k)\}$, which is colored by c. Then we build the interconnection corresponding to (s,t) as follows;

$$\mathrm{Connect}^Z(f(s),f(s)+(0,0,c))$$
$$\mathrm{Connect}^X(f(s)+(0,0,c),f(s)+(k-i,0,c))$$
$$\mathrm{Connect}^Y(f(s)+(k-i,0,c),f(s)+(k-i,l-j,c))$$
$$\mathrm{Connect}^Z(f(t)+(0,0,c),f(t)).$$

It is easy to observe that no overlappings of interconnections arise by this algorithm,because a different layer is prepared for each color. The number of cells required is less than $m^3 = n^{3/2}$. [+]

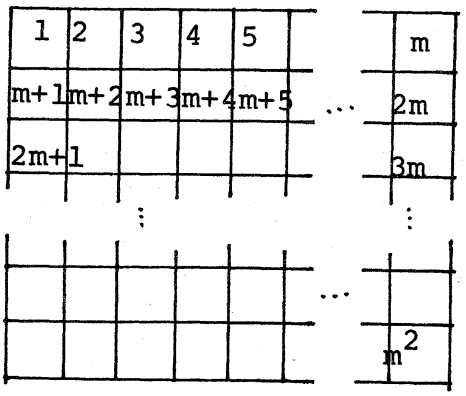

(a) Disposition of active cells and its matrix representation.

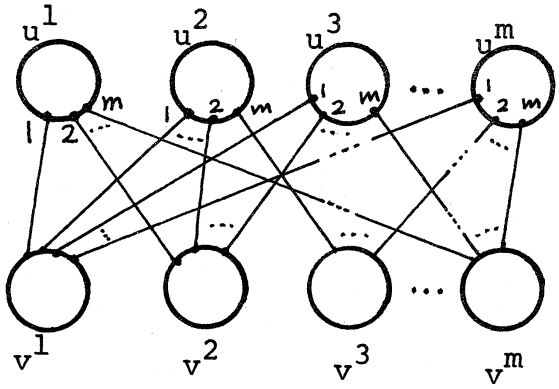

(b) The bipartite graph representation of F(*).

Fig.7. For Theorem 5.

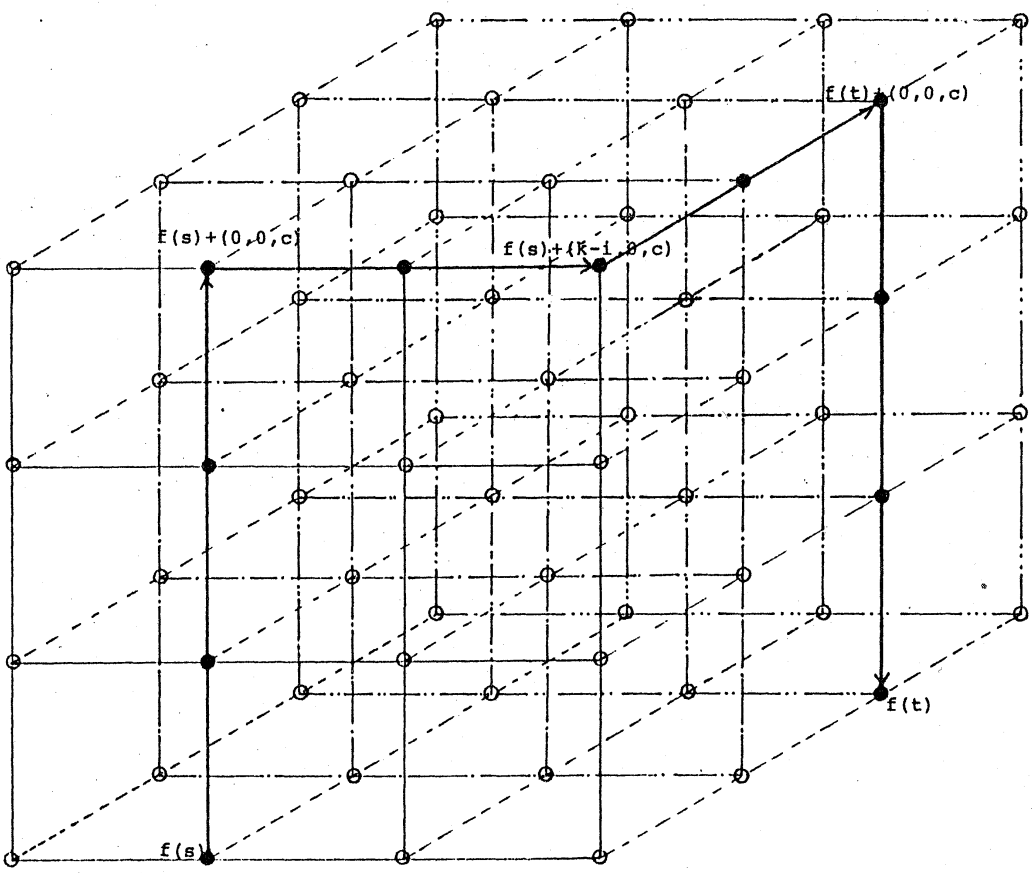

Fig.8. The edge-embedding scheme of Theorem 5 for an edge.

5.2. Embedding of graphs of degree 6

This embedding scheme is designed by combining the basic embeddings described in the previous section. We embed $f^1(a), F^1(b), \ldots, F^3(b)$ using the terminals $1, 2, \ldots, 6$. We dispose some free cells among the active cells ,and this arrangement is illustrated in Fig.9.

3 $F_2(b)$		6 $F_2(a)$
	5 $F_3(a)$	1 $F_3(b)$
2 $F_1(a)$	4 $F_1(b)$	

(a) The assignment of the terminals.

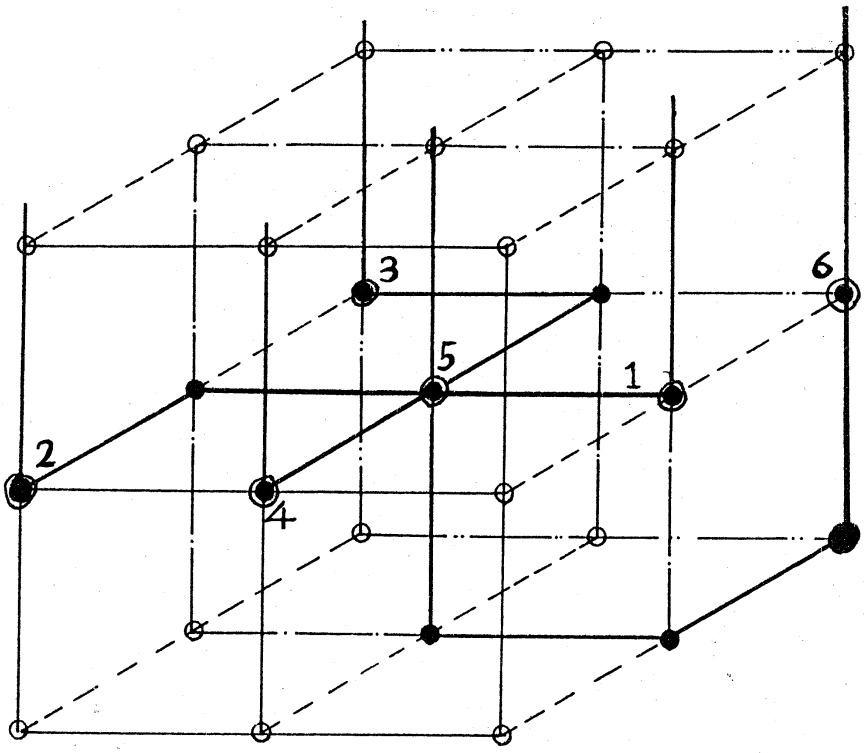

(b) A cube correspondind to a node and its terminals.

Fig.9. A unit of the cellular array for the embedding of nodes.

Theorem 6 Let H(n) be the class of graphs of degree 6. Then any graph of H(n) can be edge-embedded into CN^3 such that

$$K^E(n) < 27n^{3/2}.$$

Proof: We use the odd numbered layers for the interconnections of edges with the color "a", and the even numbered layers for the interconnections of edges with the color "b" respectively in the Z-axis. Since there is exactly one "a" and "b" in the X-axis and in the Y-axis of a cell cube corresponding to a node(Fig.9), no overlappings of interconnections occur. [+]

Theorem 7 Let H(n) be the class of graphs of degree 6. Then any graph of H(n) can be node-embedded into CN^3 such that

$$K^N(n) < 864n^{3/2}.$$

Proof: For a node we use a 12*12*6 cell cube as illustrated in Fig.10. The rough embedding scheme is also illustrated in Fig.11. [+]

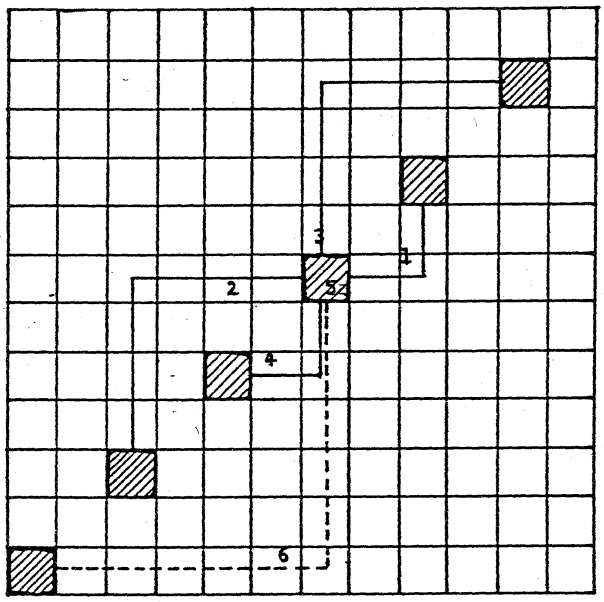

Fig.10. A cube and the assignment of the terminals.

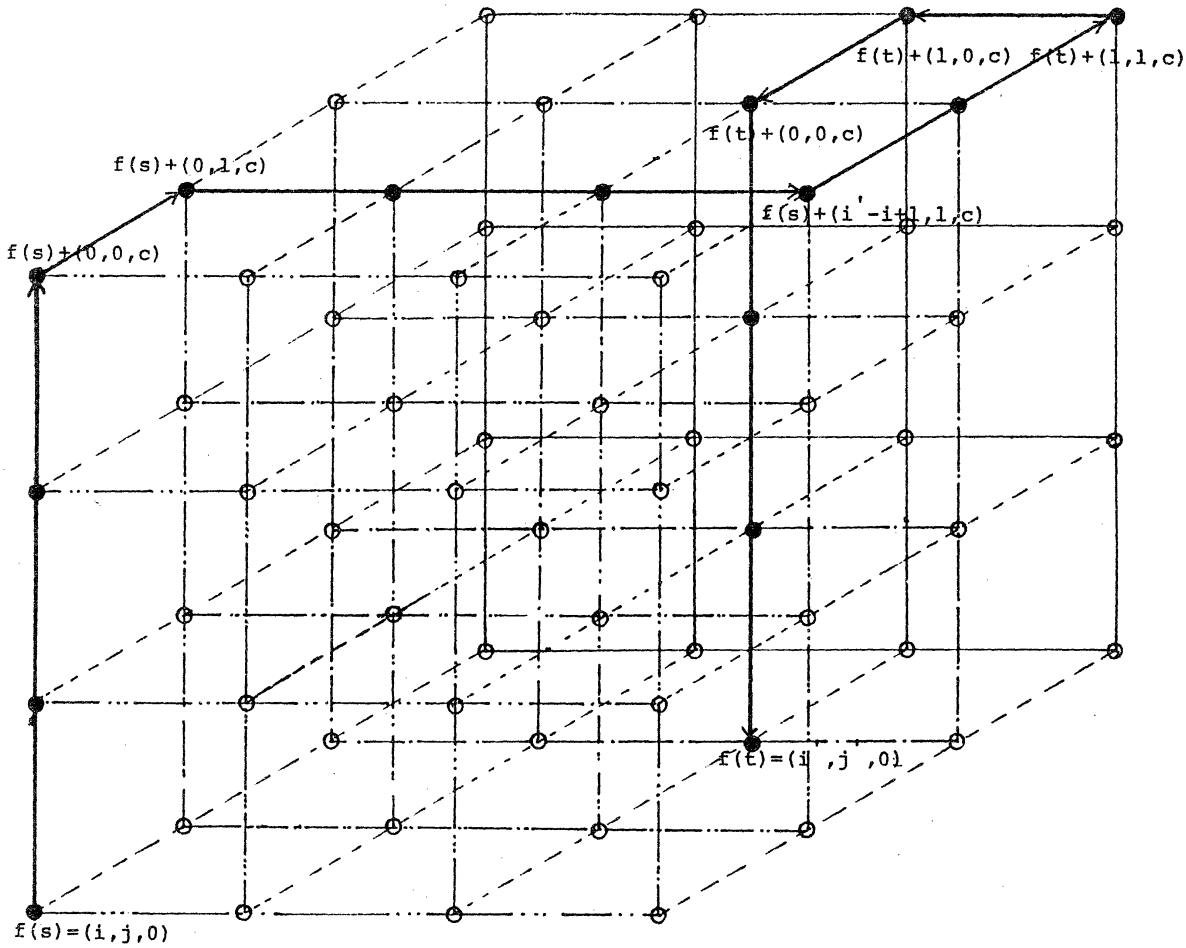

Fig.11. The embedding scheme of Theorem 7.

Example 2. Let G be the graph of Example 1 of degree 6. For the factorization (c) of Fig.3, We have the following embedding. We take $m=\lceil\sqrt{6}\rceil=3$. Since F_3 consists of cycles of odd length, the additional nodes"7" and"8" are added. It is easy to see,all the bigraphs are three edge-colorable. We denote the colors"r","w" and "g" in the graph.

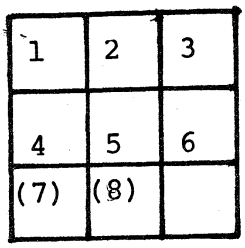

(1)

F_1(a);(1,2)(3,4)(5,6).

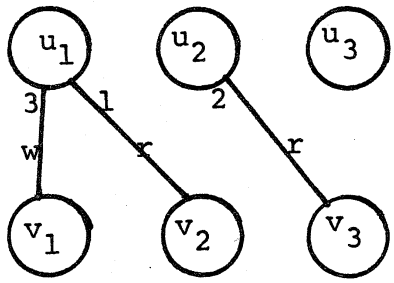

(2)

F_2(a);(1,3)(2,5)(4,6).

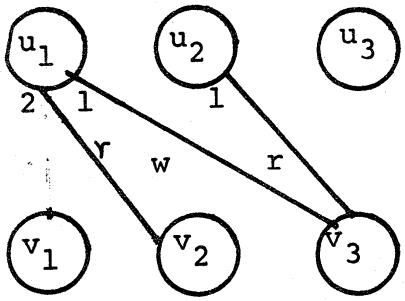

(3)

F_2(b);(3,5)(2,4)(1,6).

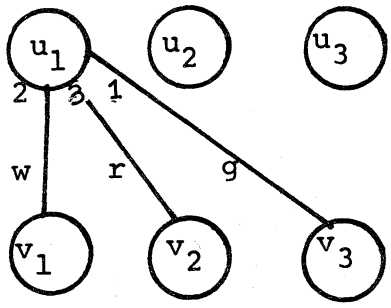

(4)

F_3(a);(1,5)(4,7)(2,3)(6,8)

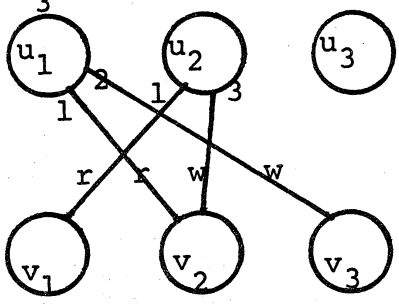

(5)

F_3(b);(4,5)(1,7)(2,6)(3,8)

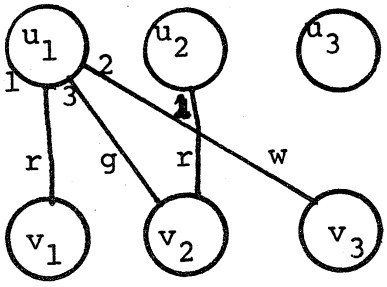

(6)

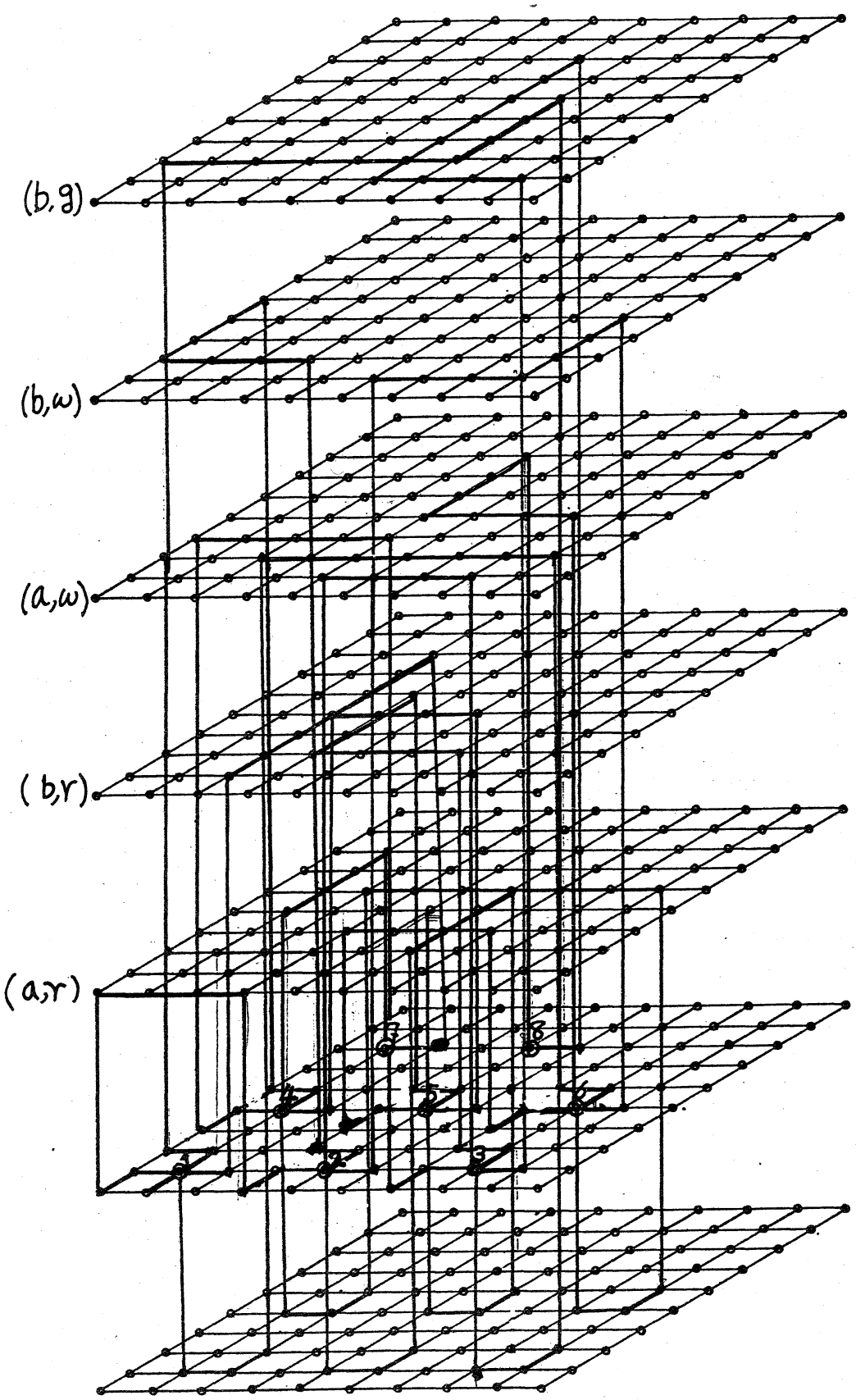

(7) An embedding of G.

Fig.12. For Example 2.

CONCLUSION

We have presented several embedding schemes of graphs into multi-layered cellulay array and three dimensional cellular array as the first step toward the cellular dataflow computer architecture. The obtained results indicates that the class of graphs of degree 6 can always be embedded into 3-CN^2 and CN^3 under both the edge-embedding and the node embedding. The node-embedding requires more cells than the edge-embedding, but the function of its cell may be simply realized. The embedding into CN^3 requires $O(n^{3/2})$ cells ,though the one into the multi-layered cellular array requires $O(n^2)$. Consequently the embedding into CN^3 may be effective if the three dimensional VLSI fabrication becomes possible in the future.

From the theoretical viewpoints, the embedding algorithms presented in this paper is conjectured to have the time complexity O(nlogn) in the serial time and $O(\log^2 n)$ in the parallel time using the parallel machine model RAC[10] by inspections.

The methodology presented here may be also applied to the problem of interconnections for VLSI circuit design. From these viewpoints the investigation on the effective algorithms should be further promoted.

Acknowledgement

A part of this work was done during the author's stay with the Technical University Braunschweig as an Alexander von Humboldt scholar. He express his appreciation to Prof.Dr.R.Vollmar for the encouragement of this research, and to Alexander von Humboldt Stiftung for the sponsorship.

References

[1] S.H.Bokhari,"On the MappingProblem",IEEETrans.on Comput.,vol.No.3, 1981,207-214.

[2] A.Domin,"PARADOCS":A Highly Parallel Dataflow Computer and its Dataflow Language, Microprocessing and Microprogramming 7,1981, 20-31.

[3] J.Gecsei and J.P.Brassard," The Topology of Cellular Partitioning Network", IEEE Trans.on Comput. Vol.C-30,No.2,February 1981,164-168.

[4]K.Hagiwara,N.Suzuki and N.Tokura,"Graph Embedding on a Three Dimensional Model, IECE, Tech. Comittee of Automaton and Language, AL82-5, 1982.

[5]M.Harao and R.Vollmar," Embedding of Graphs into Cellular Arrays", Informatik-Bericht of the Technical University Braunschweig, No.82012.,1982.

[6]M.Harao and S.Noguchi," Embedding of Graphs into Multi-layered Cellular Arrays", IECE.Tech.Comittee of Automaton and Language, AL82-13,1982.

[7] F.Harary,"Graph Theory",Addison-Wesley Publ.Co.,1969.

[8]E.Horowitz and A.Zorat," The Binary Tree as an Interconnection Network; Application to Multiprocessor Systems and VLSI", IEEE Trans.Comput.vol.C-30 , No.4, April,1981,247-253.

[9]W.H.Kautz,"K.N.Levitt and A.Waksman," Cellular Interconnection Arrays", IEEE Trans. on Comput. vol.C-17,No.5,May,1968,443-451.

[10]G.F.Lev,N,Pippenger and L.G.Valiant," A Fast Parallel Algorithm for Routing inPermutation Network",IEEE,Trans.on Comput.vol.C-30,No.2, February 1981,93-100.

[11]C.Mead and L.Conway," Introduction to VLSI System", Addison-Wesles Publishing Company,Inc.,1980.

[12]A.L.Rosenberg," Three Dimensional VLSI,A Case Study," IBM .T.J.Watson Reasearch Center,Research Report RC 8745,1981.

[13]L.Snydey,"Introduction to the Configurable,Highly Parallel Computer, IEEE.Computer,January,1982,47-56.

[14]L.G.Valiant,"Universality Consideration in VLSI Circuits",IEEE Trans.Comput.vol.C-30,No.2, February,1981,135-140.

[15]L.G.Valiant,"Universal Circuits", ACM 8th Annual Symp.on Theory of Computing,1976,196-203.